mobilamb
TRIKDIS Official Distributor

RF-LORA wireless transceiver – installation and setup manual

Installation and setup manual for the Trikdis RF-LORA wireless transceiver: connection to the FLEXi SP3 alarm control panel, DIP switch and antenna, adding the LoRa expanders in TrikdisConfig, indicator lights, frequently asked questions.

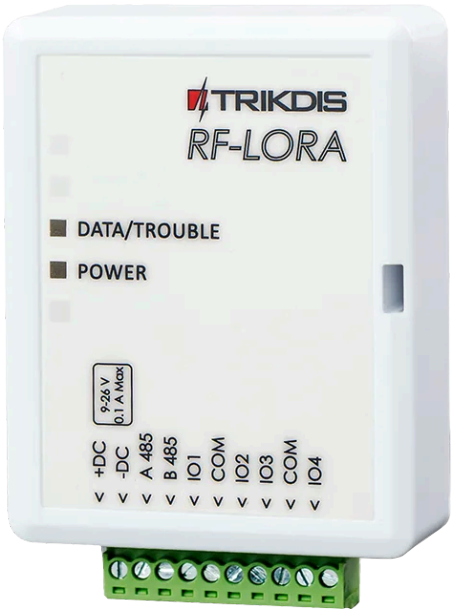

Edition: 2026-11-17
Always up-to-date web version: https://mobilamb.eu/rf-lora-manual

Contents

1. Overview

1.1 What does it work with?

1.2 Technical data

1.3 Parts

1.4 Terminals

1.5 Indicator lights

2. Mounting and wiring

2.1 Mounting

2.2 Connecting to the FLEXi SP3

3. Setup in TrikdisConfig

3.1 Registering the RF-LORA, enrolment

4. Frequently asked questions

5. Safety instructions

See also

1. Overview

The **RF-LORA** wireless transceiver (in TrikdisConfig: **RF-LORA transceiver**) is the central element of the Trikdis wireless family. With an RF-LORA connected to the **FLEXi SP3** control panel, a wireless or a hybrid (mixed: wired and wireless) alarm system can be built. These wireless devices can be detectors, sirens, panic buttons, or inputs (zones) or controllable outputs (PGMs) on remote expander modules.

This manual describes the **4F** (433 MHz) version; it does not cover the 8F (868 MHz) versions.

Together with the **iO-LORA** and **iO8-LORA** wireless expanders, the RF-LORA increases the number of inputs and outputs of the FLEXi SP3 over a two-way radio link. It connects to the alarm control panel by wire, on the **RS485 bus**, and with a clear line of sight it offers a wireless range of up to **5000 metres**.

The "up to … m" distances are theoretical maximums achievable under ideal conditions. In practice, the quality and routing of the cable, sources of interference and, for radio links, walls and terrain give a considerably shorter range. Plan with a margin, and on long runs check the connection during commissioning.

1.1 What does it work with?

The RF-LORA is compatible with the **FLEXi SP3** alarm control panel, as well as with the **GATOR** (GV17, cellular) and the **GATOR WiFi** (WP17) gate and door controllers. **One** RF-LORA can be connected to a FLEXi SP3.

RF-LORA kompatibilis eszközök

- IO8-LORA - vezeték nélküli bővítő 8 kontaktussal (az összes kontaktust választható bemenetnek vagy kimenetnek)
- IO-LORA - vezeték nélküli bővítő beépített relével (főként kapukhoz, ajtókhoz, sorompókhoz, garázskapukhoz használt)
- PB-LORA - vezeték nélküli pánikgomb (akár 250 pánikgomb használható egy rendszerben)
- M4-MAG - vezeték nélküli mágneses nyitásérzékelő
- M4-PIR - vezeték nélküli beltéri PIR mozgásérzékelő
- M4-SMK - vezeték nélküli füstérzékelő
- M4-SIREN - vezeték nélküli kültéri sziréna
- M4-EXTENDER - vezeték nélküli jelismétlő (hatótávolság-növelő)

How many devices can connect to one RF-LORA:

- **FLEXi SP3:** up to **8 LoRa modules** (iO-LORA, iO8-LORA, PB-LORA), with firmware of any receiver code (SP3_xxx0, xxx1, xxx2 or xxx4).
- **FLEXi SP3, PB-LORA panic buttons:** if the panel runs "release 2" firmware, version 1.16 or newer (for example SP3_xxx2_0116.fw), **250 panic buttons** can be enrolled. With SP3_xxx4 firmware, up to 8 panic buttons can be used.
- **FLEXi SP3, Maximum (M4) devices:** up to 32 detectors, 16 sirens and 32 remote controls, with firmware of receiver code 4, version 1.21 or newer (SP3_xxx4; use the latest version) – see sections 1.7 and 6.6 of the FLEXi SP3 manual.
- **GV17 GATOR:** up to **8 iO-LORA** units, plus one **iO8-LORA** (or one wired iO8 instead).
- **WP17 GATOR WiFi:** up to **8 iO-LORA** units, with WP17 firmware 1.21 or newer.

With the FLEXi SP3, you add the LoRa expanders in the panel's TrikdisConfig settings (chapter 3). With the GATOR gate controller, you add the expanders in the gate controller's **Modules** list; the RF-LORA itself does not need to be added to the list there – see section 5.4.1 of the GV17 manual and section 5.4 of the WP17 manual.

1.2 Technical data

Parameter	Value
Frequency	433.3–434.7 MHz (4F version)
Modulation	LoRa
Supply voltage	9–26 V DC
Current consumption	up to 50 mA in standby · up to 150 mA briefly, while transmitting
Message encryption	yes
Range in open space	up to 5000 m
Connection to the host device	RS485 bus
Operating environment	−20 °C … +50 °C, relative humidity up to 80% (at +20 °C)
Dimensions	62 × 82 × 25 mm
Weight	80 g

The product comes with a standard antenna that suits most applications. If a good-quality link is needed over the greatest possible distance, use a higher-gain antenna (**AX-ANT-KIT**). It is also available in the shop:

RF-LORA large Antenna Meteor 433MHz

1.3 Parts

The controls and connectors of the RF-LORA on the case and on the printed circuit board:

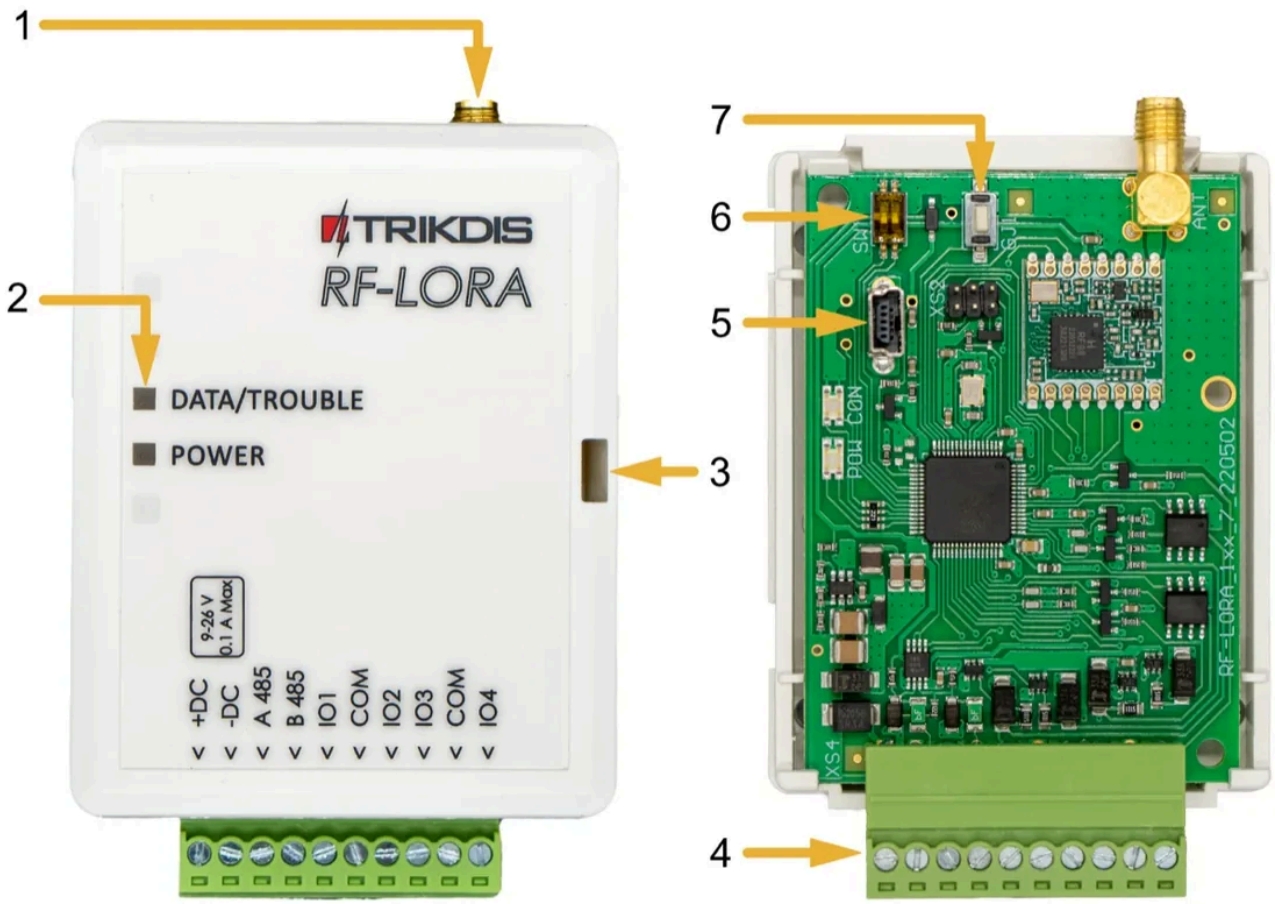

Figure 1. Parts of the RF-LORA – on the left the closed case, on the right the printed circuit board without the cover.

- 1 SMA connector for the radio antenna
- 2 indicator lights (**DATA/TROUBLE**, **POWER**)
- 3 opening slot of the cover
- 4 terminal block for the external connections
- 5 USB Mini-B connector for updating the firmware
- 6 **SW** DIP switch
- 7 **DJ1** button – switches the learning (pairing) mode of the LoRa modules on and off

The two switches of the **SW** DIP switch:

- **Switch 1 – radio channel:** OFF = RF1, ON = RF2. Change it if the current channel is heavily loaded.
- **Switch 2 – modulation:** OFF = fast, ON = slow. In the ON position the range roughly doubles, depending on the environment; if the link is also good in the OFF position, use that.

In the ON position (slow modulation) the system reacts more slowly, and the battery of the PB-LORA panic button runs down sooner.

The switch positions must match

The **SW** switches of the RF-LORA and of all the LoRa modules connected to it must be in the same position, otherwise there is no radio link.

1.4 Terminals

Terminal	Function
+DC	supply voltage, positive (9–26 V DC)
–DC	supply voltage, negative

Terminal	Function
A 485	RS485 bus, A
B 485	RS485 bus, B
IO1–IO4	not used
COM	not used

Attention!

The 4 I/O terminals on the device (IO1–IO4) and the COM terminals cannot be used.

1.5 Indicator lights

Indicator	State	Meaning
DATA/TROUBLE	flashes or lights red	the connection with the module has been lost
DATA/TROUBLE	flashes green and red	learning mode: pairing the LoRa modules
DATA/TROUBLE	lights green for 3 seconds	in learning mode: a LoRa module has been paired
POWER	off	no supply voltage
POWER	flashes green	normal supply voltage
POWER	flashes yellow	low supply voltage (11.5 V or less)
POWER	lights yellow	no RS485 connection with the FLEXi SP3

2. Mounting and wiring

Figyelem!

Tilos a vezetékezést feszültség alatt álló eszközön elvégezni. A munka előtt a megfelelő áramtalanításról és érintésvédelemről (beleértve a szünetmentes működést biztosító akkumulátorokat) gondoskodni kell.

2.1 Mounting

1. Remove the cover.
2. Take out the printed circuit board.
3. Fix the bottom of the case in the desired place with screws.
4. Put the board back.
5. Close the cover.

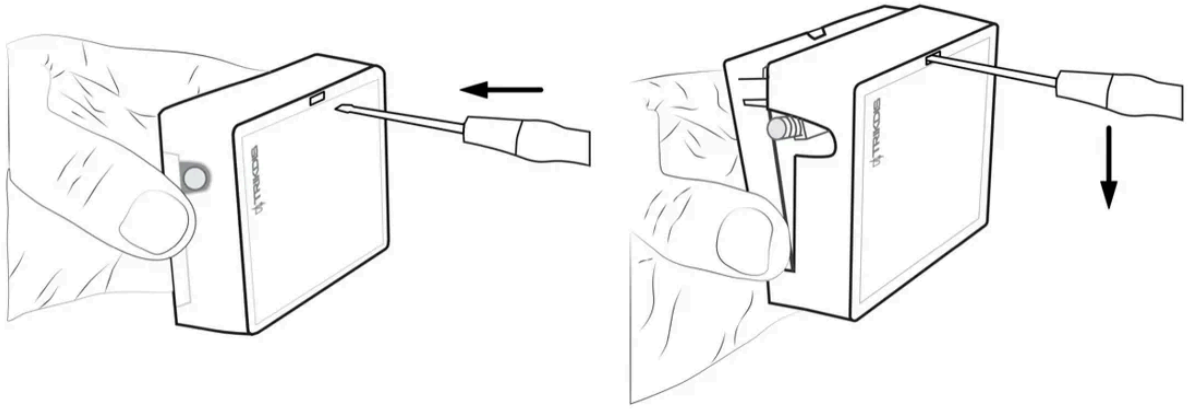

Figure 2. Removing the cover: insert the screwdriver into the slot on the side of the case (left), then press its handle downwards to snap the cover off (right).

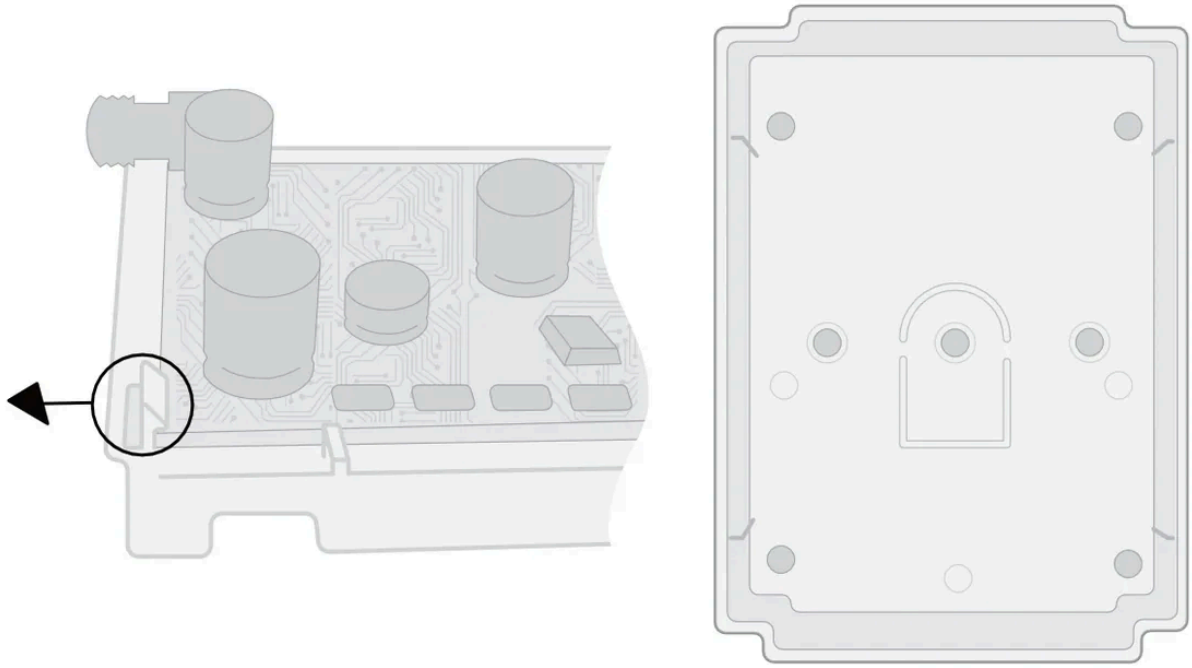

Figure 3. Left: the board is held by a retaining tab at the edge of the case – bending it in the direction of the arrow releases the board. Right: the bottom of the case with the holes for the fixing screws.

2.2 Connecting to the FLEXi SP3

Connect the RF-LORA to the RS485 bus of the FLEXi SP3; it also takes its power from the panel's AUX output:

FLEXi SP3	RF-LORA
AUX+ (+12 V)	**+DC**
AUX–	**–DC**
485 A	**A 485**
485 B	**B 485**

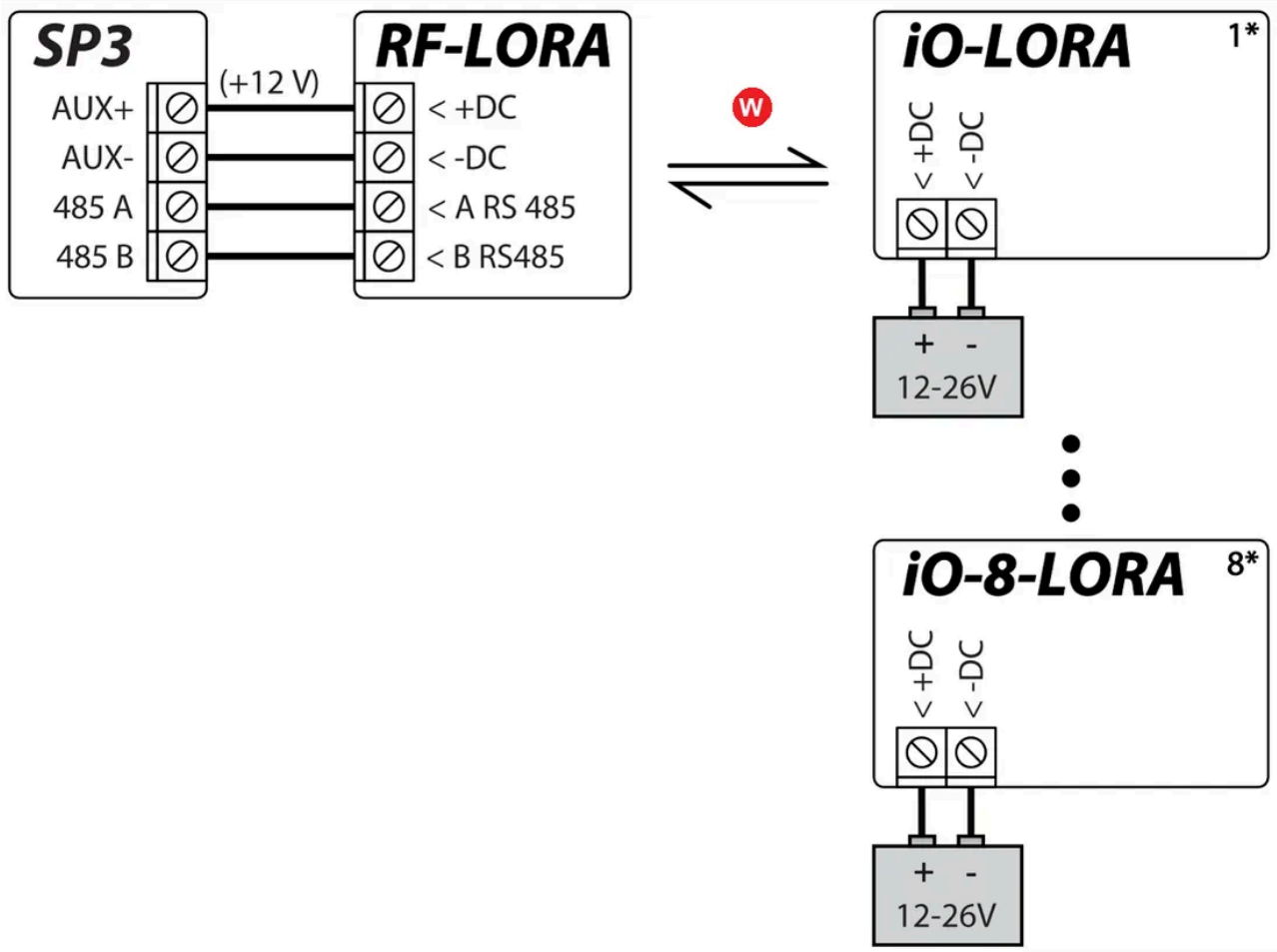

Figure 4. Connecting the RF-LORA to the FLEXi SP3, and the LoRa modules: SP3 **AUX+** (+12 V) → **+DC**, **AUX−** → **−DC**, **485 A** → **A RS485**, **485 B** → **B RS485**. The RF-LORA reaches the iO-LORA and iO8-LORA modules by radio ("Wireless connection": wireless link, up to 5000 m) (1* … 8*: up to 8 modules); each module gets its own 12–26 V supply on its **+DC** and **−DC** terminals.

- W wireless link ("Wireless connection"), up to 5000 m ("up to 5000 m")

The "up to … m" distances are theoretical maximums achievable under ideal conditions. In practice, the quality and routing of the cable, sources of interference and, for radio links, walls and terrain give a considerably shorter range. Plan with a margin, and on long runs check the connection during commissioning.

The LoRa modules do not need to be wired to the panel: each gets its power at its own location – the iO-LORA and the iO8-LORA from a power supply, the PB-LORA panic button from a battery – and connects to the RF-LORA by radio. The wiring of the modules is described in their own manuals.

3. Setup in TrikdisConfig

You add and set up the LoRa expanders in the TrikdisConfig settings of the FLEXi SP3.

Az összes Trikdis eszköz egy közös szoftverrel programozható. A program neve TrikdisConfig és a gyártó honlapjáról letölthető.

TrikdisConfig Letöltés a trikdis.com oldalról.

Letöltést követően telepítsd a programot. Ha bármikor a TrikdisConfig indításakor a program azt jelzi, hogy új verzió jelent meg, töltsd le az ajánlott frissítést és telepítsd!

1. The RF-LORA must be connected to the FLEXi SP3 (2.2).
2. Switch on the supply voltage of the FLEXi SP3.
3. Switch on the power of the iO-LORA or iO8-LORA expanders.
4. Start TrikdisConfig.
5. Connect the FLEXi SP3 to the computer with a USB Mini-B cable, or connect to it remotely.
6. Press the **Read [F4]** button: the program reads the panel's settings. If the program asks for it, enter the six-character administrator code.
7. In the **Modules** list, select the **iO-LORA expander** or the **iO8-LORA expander** item.
8. In the **Serial No.** field, enter the serial number of the module.
9. On the **Zones** tab, set up the expander's inputs: in the zone's **Input** list, the expander's inputs appear under the name **RS485 Expander ID...**.
10. On the **PGM** tab, set up the expander's outputs in the same way, in the **PGM output** list.
11. At the end of the setup, press the **Write [F5]** button and wait until writing is finished.
12. Press the **Disconnect** button and unplug the USB cable.
13. Test the expander: trigger the inputs and switch the outputs.

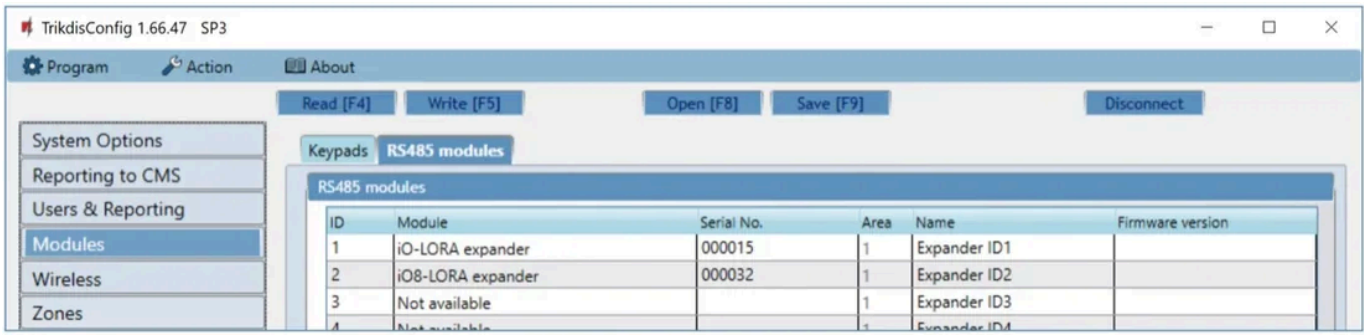

Figure 5. TrikdisConfig – FLEXi SP3, **Modules** → **RS485 modules**: an **iO-LORA expander** in row 1 and an **iO8-LORA expander** in row 2, both with their serial number (**Serial No.**), partition (**Area**) and name (**Name**).

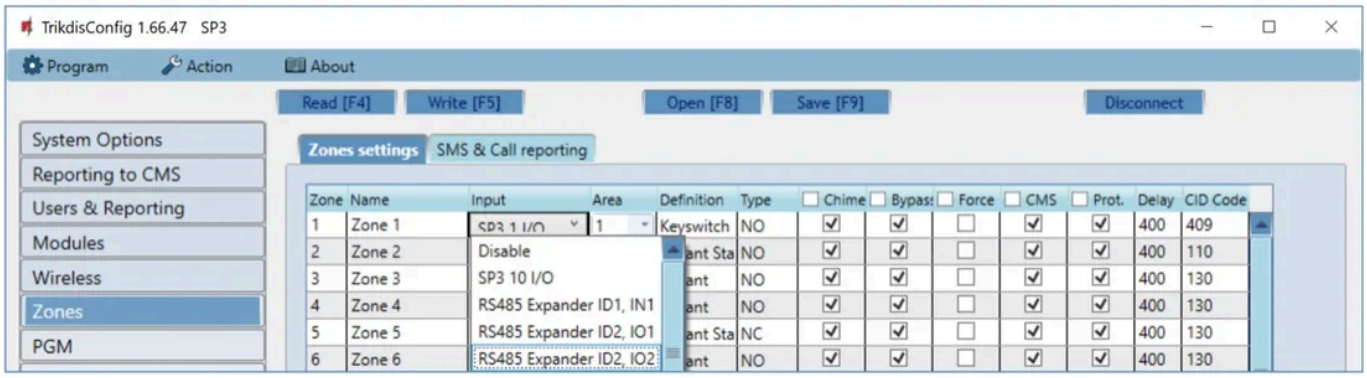

Figure 6. Zones → **Zones settings**: in the **Input** list of zone 1, next to the panel's own input (**SP3 10 I/O**), **RS485 Expander ID1, IN1** (the input of the iO-LORA) and **RS485 Expander ID2, IO1 / IO2** (the terminals of the iO8-LORA).

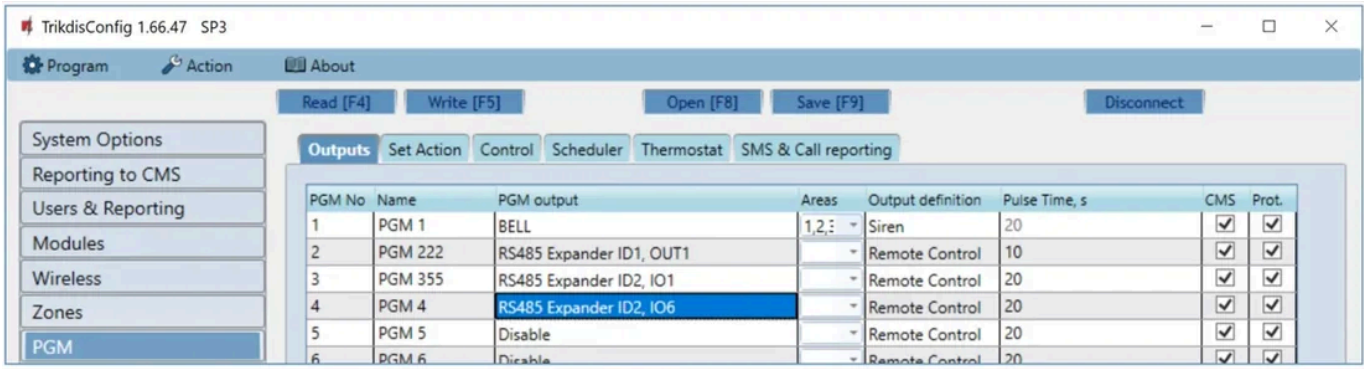

Figure 7. PGM → Outputs: in the **PGM output** column, **RS485 Expander ID1, OUT1** (the relay of the iO-LORA) and **RS485 Expander ID2, IO1 / IO6** (the terminals of the iO8-LORA), with the **Remote Control** output function and a pulse time (**Pulse Time, s**).

Warning

While the device is connected to a computer via USB cable, it is in programming mode: its normal operation stops, it does not monitor, does not report, cannot be controlled, is powered from USB, and restarts once the cable is unplugged. Therefore the device must not be freely accessible: keep it in a closed metal enclosure with tamper protection or with a motion detector covering the enclosure. More in the FAQ

3.1 Registering the RF-LORA, enrolment

If the system also has **Maximum (M4)** wireless detectors, sirens, remote controls, or **PB-LORA** panic buttons in the 250-panic-button mode, the RF-LORA itself must also be added to the **Modules → RS485 modules** list (**RF-LORA transceiver**, with its serial number), and then the devices must be enrolled in learning mode in the **Wireless sensors** window. The steps are described in section 6.6 of the "FLEXi" SP3 alarm control panel – installation and programming manual.

- Learning mode is started by the **Learn sensors** button in TrikdisConfig or by the **DJ1** button of the RF-LORA (in the FLEXi SP3 manual: **LEARN**); the **DATA/TROUBLE** light then flashes green and red.
- During enrolment, the RF-LORA should be at least 1 m away from the devices being enrolled.

4. Frequently asked questions

There is no radio link with the module – what should I check?

1. Whether both switches of the **SW** DIP switch are in the same position on the RF-LORA and on the module (1.3) – with different positions there is no radio link.
2. Whether the module has power, and whether its serial number in the **Modules** list is correct (chapter 3).
3. The radio signal level is shown by the expander's **NETWORK** light with green flashes (0–10); 4 is already enough for the iO-LORA and 3 for the iO8-LORA, and the PB-LORA is recommended to be used with at least four flashes.
4. With a weak signal, set switch 2 to ON (slow modulation) on every device, or use a higher-gain antenna (1.2).

The POWER light is steady yellow

The RF-LORA is not communicating with the FLEXi SP3 on the RS485 bus: check the **A 485** and **B 485** wires (2.2).

The POWER light flashes yellow

The supply voltage is low (11.5 V or less): check the power supply – the RF-LORA works from 9–26 V DC.

What are the IO1–IO4 and COM terminals for?

They cannot be used on the RF-LORA (1.4).

Which switch position should I choose?

By default, fast modulation (switch 2 OFF). If there is no reliable link because of the distance, slow modulation (ON) roughly doubles the range, depending on the environment, but the system reacts more slowly. Change the channel (switch 1) if the current channel is heavily loaded. Whichever you change, set it the same way on every LoRa device.

5. Safety instructions

Figyelem!

Az elektromosság veszélyes! Személyi sérülést vagy HALÁLT, valamint anyagi kárt okozhat!

A telepítés során elektromos berendezéssel történik munkavégzés, amit az érvényes erős- és gyengeáramú rendelkezések betartásával kell kivitelezni!

A garancia (jótállás) érvényesítésének is feltétele, hogy az eszközt szakképzett személy telepítse az elektromos berendezések telepítésére vonatkozó előírások betartásával és az elektromos berendezések biztonságos üzemeltetésére vonatkozó hatályos előírásokat követve.

- The RF-LORA may only be installed and maintained by qualified persons.
- Before installation, read this manual carefully to avoid mistakes that could lead to malfunction or even damage to the equipment.
- Disconnect the power before making any connection.
- Changes, modifications or repairs not authorized by the manufacturer void the warranty.
- Do not throw the device and its parts in household waste: follow the local waste sorting regulations.

See also

- "FLEXi" SP3 alarm control panel – installation and programming manual – wiring and setting up the panel, including registering the RF-LORA and enrolling the wireless devices (6.6).
- GV17 GATOR gate controller – installation and programming manual and WP17 GATOR WiFi gate controller – installation and programming manual – adding the LoRa expanders in the gate controller's **Modules** list.
- Flexible wireless access control with the GATOR RF-LoRa system – several gates wirelessly with one GATOR.
- The LoRa modules in the shop:

Trikdis IO-LORA wireless expander module **Trikdis IO8-LORA wireless expander module**

Trikdis PB-LORA wireless panic button

- Trikdis documentation: docs.trikdis.com – RF-LoRa Wireless Expander.

Related products

Trikdis RF-LORA wireless expander module | **RF-LORA large Antenna Meteor 433MHz**

Trikdis IO-LORA wireless expander module | **Trikdis IO8-LORA wireless expander module**

Trikdis PB-LORA wireless panic button

Copyright

This manual was produced by trikdis.hu and mobilamb.eu. Its text, structure, our own illustrations and additions are our intellectual property and are protected by copyright. Without our permission it may not be copied, distributed or published on another website, in whole or in part. It may be freely downloaded and printed for installing and using the product.

Trikdis and Protegus names and logos are trademarks of UAB Trikdis.

Always up-to-date version of this manual: https://mobilamb.eu/rf-lora-manual